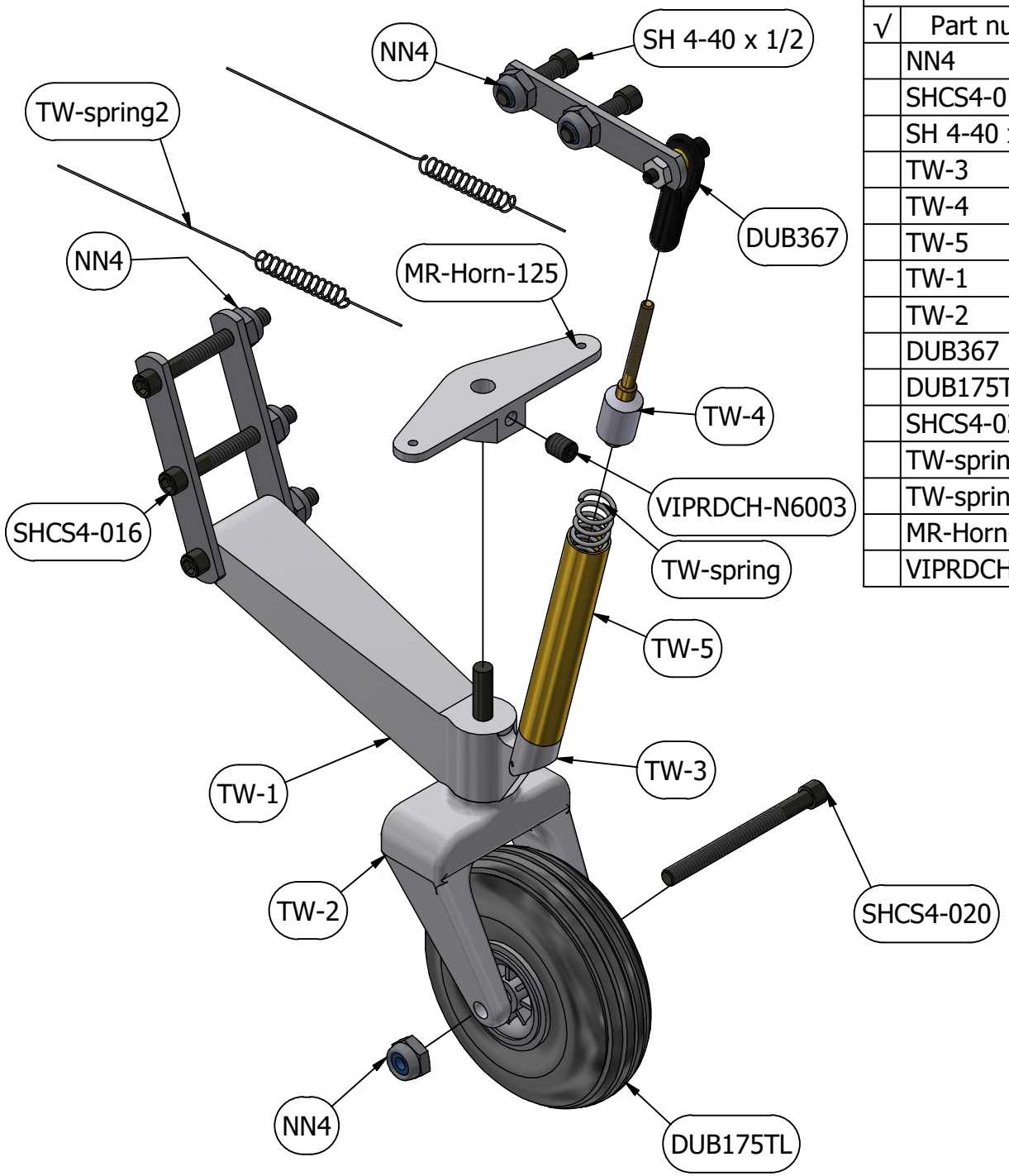

Parts List			
√	Part number	Description	Qty
	NN4	Nylock Nut 4-40	6
	SHCS4-016	SHCS 4-40 x 1" lg.	3
	SH 4-40 x 1/2	SHCS 4-40 x 1/2" lg.	2
	TW-3	Oleo hand	1
	TW-4	Tail wheel oleo piston	1
	TW-5	Brass tube Ø1/4" x Ø9/32"	1
	TW-1	Tail wheel arm	1
	TW-2	Tail wheel fork	1
	DUB367	Swivel ball link 2-56 (Not included)	1
	DUB175TL	Wheel Ø1 3/4" (Not included)	1
	SHCS4-020	#4-40 x 1 1/4" lg.	1
	TW-spring	Compresion spring	1
	TW-spring2	Tension spring	2
	MR-Horn-125	Alum. Steering arm (Ø1/8")	1
	VIPRDCH-N6003	Set screw 6-32 NC x 3/16" lg.	1

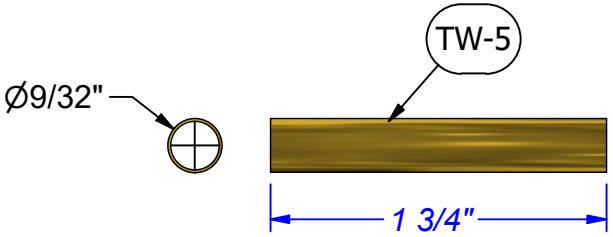

MR Aerodesign enr.

DHC-2 Beaver

Tail wheel-kit

Drawn by: *M.Rousseau*

Date: *2006-11-20*

Dwg number: *Tail wheel-kit.iam*

Rev.: **1.3**